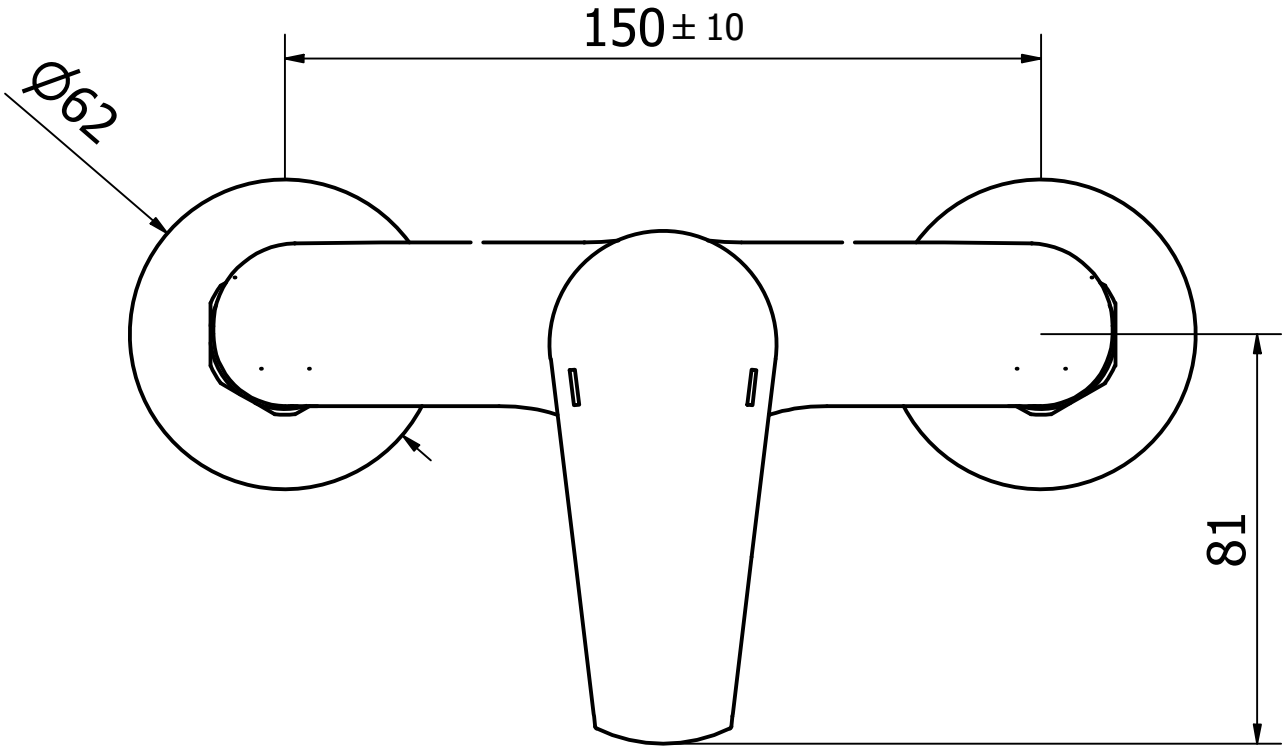
150 ± 10
Ø62
81

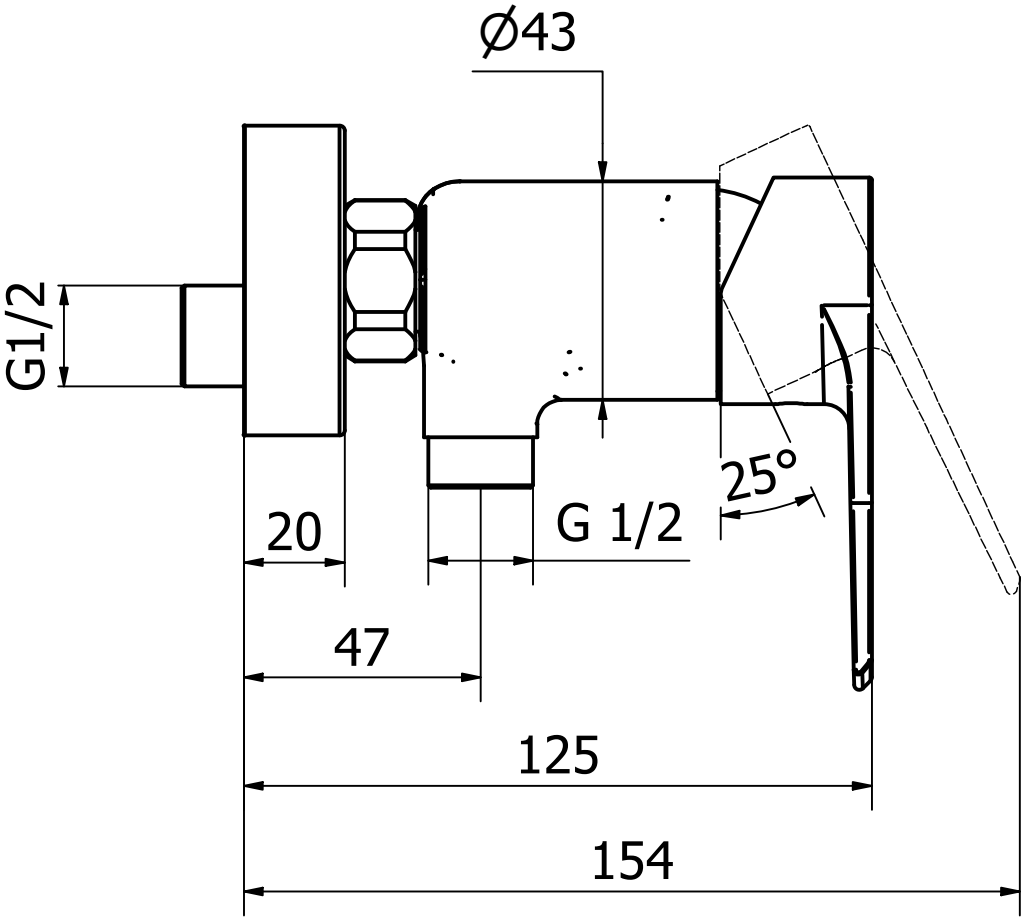
Ø43
G1/2
25°
20
G 1/2
47
125
154